Rubber Metal anti vibration mounts

SM TYPE

The SM-type AMC Mecanocaucho® mounts are used in cases where light or heavy machines are not fixed to the floor or ground. The height adjustment system can be used to adjust the machines to the required level, thus insulating areas nearby from vibrations and reducing noise. The AMC-Mecanocaucho® type SM comes with a tilting system accomodating uneven surfaces.

TECHNICAL CHARACTERISTICS

The elastomer used is a mixture of oil-resistant synthetic Nitrile Butadyene Rubber (NBR).

APPLICATIONS

Levelling machine mounts

Rubber Metal anti vibration mounts

SM TYPE

DRAWINGS

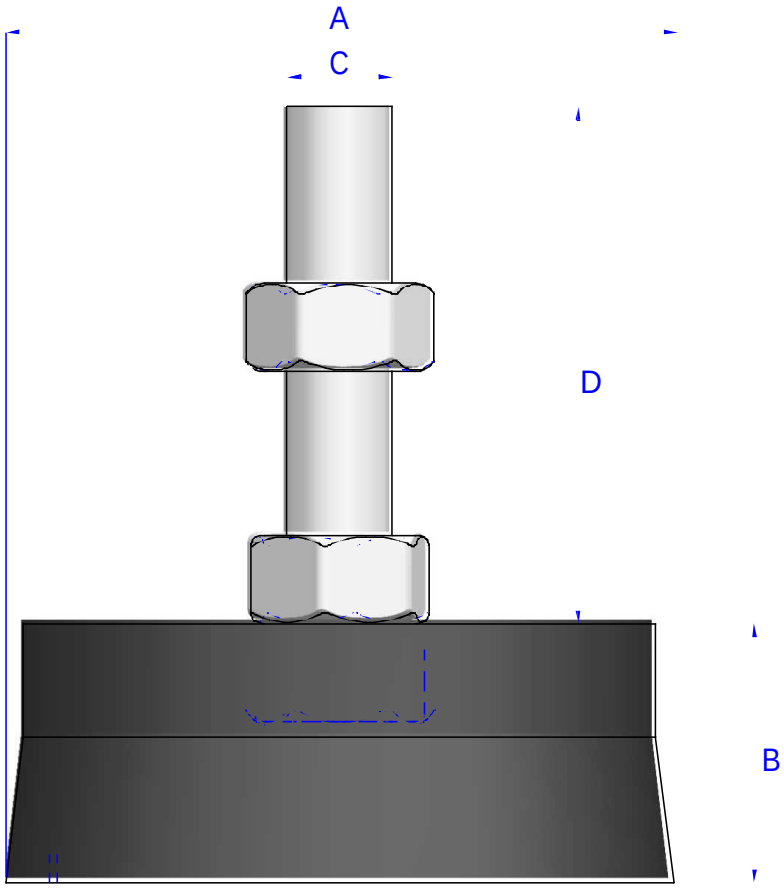

DIMENSIONS

Type	A (mm)	B (mm)	C (mm)	D (mm)	LOAD kg MAX	Weight (gr.)	Code
S.M.-40	40	18	M-8	48	45	79	146001
S.M.-60	65	28	M-12	89	150	307	146002
S.M.-70	75	29	M-12	89	250	363	146003
S.M.-90	95	30	M-12	89	500	573	146004
S.M.-120	125	31	M-16	116	1000	904	146005

SM TYPE

OPERATION AND ASSEMBLY

Height is adjusted by means of a screw, once the machine has been assembled. The wide contact between the base of the machine guarantees good overall stability.

Lift the machine and insert the mount under it. Insert and turn the screw manually until it can be wound into the thread in the mount . Adjust the height of the machine by turning the screw. When the machine is level , lock the mounts using the checknuts.