Rubber Metal antivibration mounts

MD ANTI VIBRATION MOUNT

AMC-Mecanocaucho® MD-type anti vibration mounts have a similar construction to the BSB and BRB ranges. The advantage of this mount is that it is manufactured in a high-damping rubber compound.

Its special compound mix affords it a high degree of antivibration isolation and yet offers great stability to suspended equipment .

TECHNICAL CHARACTERISTICS

- The top metal cap protects the rubber section from possible deisel , oil splashes.
- It has an electrolytic coating that protects the metal parts against corrosion.
- The mounts have an interlocking metal component that provides fail-safe protection for mobile applications. This device limits vertical movement when the mounts are subjected to shock loads in transit .

APPLICATIONS

This mount has been specially designed to isolate engines that produce high-amplitude vibrations.

<>Engines from 1 to 3 cylinders used on - Motor Pumps, Gen Sets, Compressors, Ventilators ;

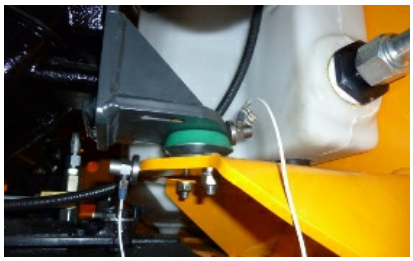

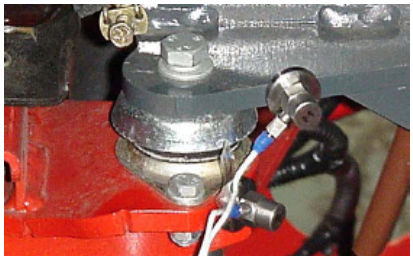

In order to adapt its products to the state of the art, AMC S.A. reserves the right to modify the conception and manufacture of the materials presented in this catalogue without prior notice.

Rubber Metal antivibration mounts

MD ANTI VIBRATION MOUNT

DRAWINGS

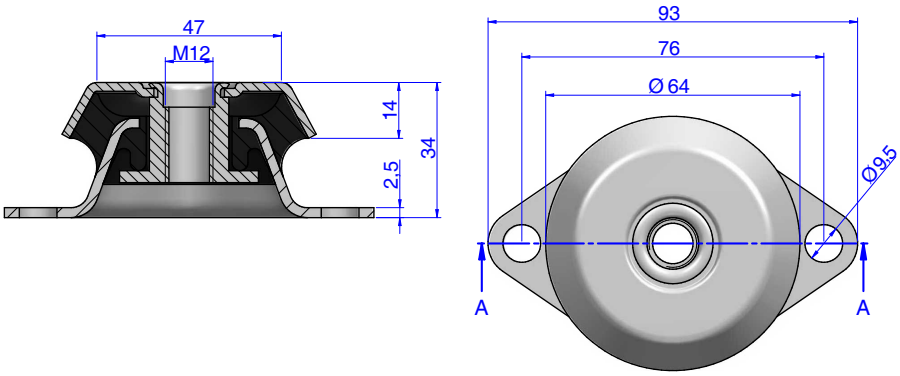

DIMENSIONS

Type	Load (kg.)	Weight (gr.)	Code
A	130	238	135210
B	105	238	135212
C	70	238	135213
D	50	238	135219

In order to adapt its products to the state of the art, AMC S.A. reserves the right to modify the conception and manufacture of the materials presented in this catalogue without prior notice.

Rubber Metal antivibration mounts

MD ANTI VIBRATION MOUNT

ELASTICAL PROPERTIES

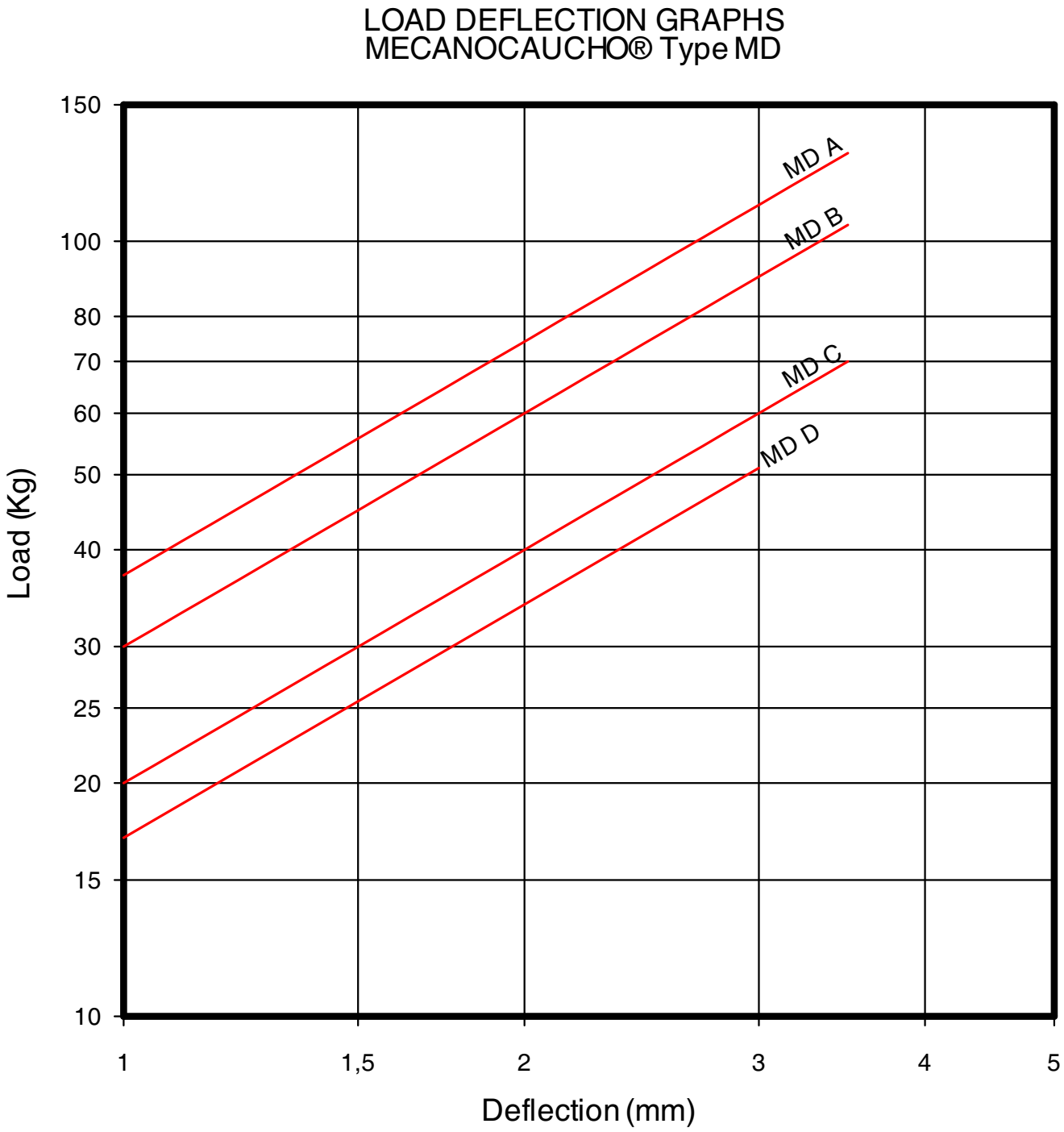

In order to adapt its products to the state of the art, AMC S.A. reserves the right to modify the conception and manufacture of the materials presented in this catalogue without prior notice.

Rubber Metal antivibration mounts

MD ANTI VIBRATION MOUNT

OPERATION AND ASSEMBLY

The AMC-Mecanocaucho® MD type works as an antivibration mount but also as an engine stabiliser. This mount is used when conventional rubber metal mounts do not offer sufficient stability to the suspended equipment.

MD types are installed in small engines of 1, 2 and 3 cylinders which are particularly unstable.

These mounts are suitable for the suspension of machines which are subject to frequent start /stop conditions and also where the passage of resonance needs a high degree of damping . Or working in conditions which are close to the frequency of resonance of the system.

Diesel engines require MD mounts, particularly when there are uneven numbers of small diameter cylinders, which create high-amplitude engine vibrations, therefore requiring extra damping to limit these high amplitudes.

In order to adapt its products to the state of the art, AMC S.A. reserves the right to modify the conception and manufacture of the materials presented in this catalogue without prior notice.